Taylor Hall, The College of Wooster

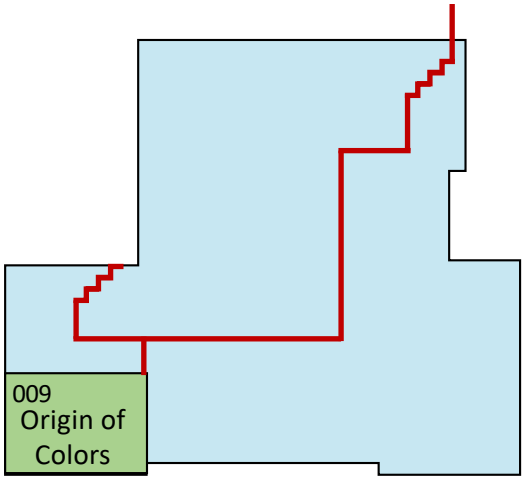

Taylor Hall Floor 0 (Basement)

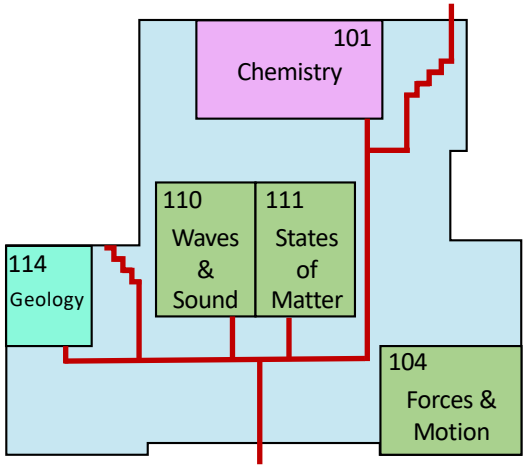

Taylor Hall Floor 1

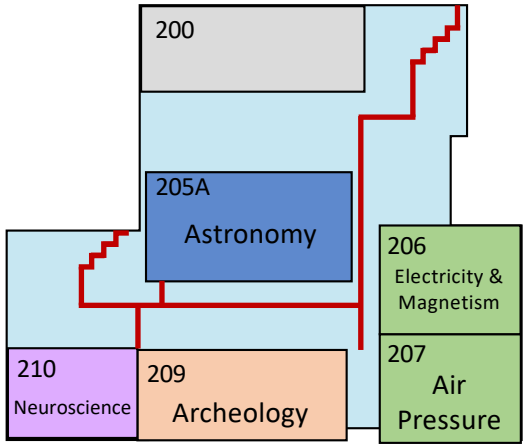

Taylor Hall Floor 2

Community Science Day

April 18, 2026

1-4 PM